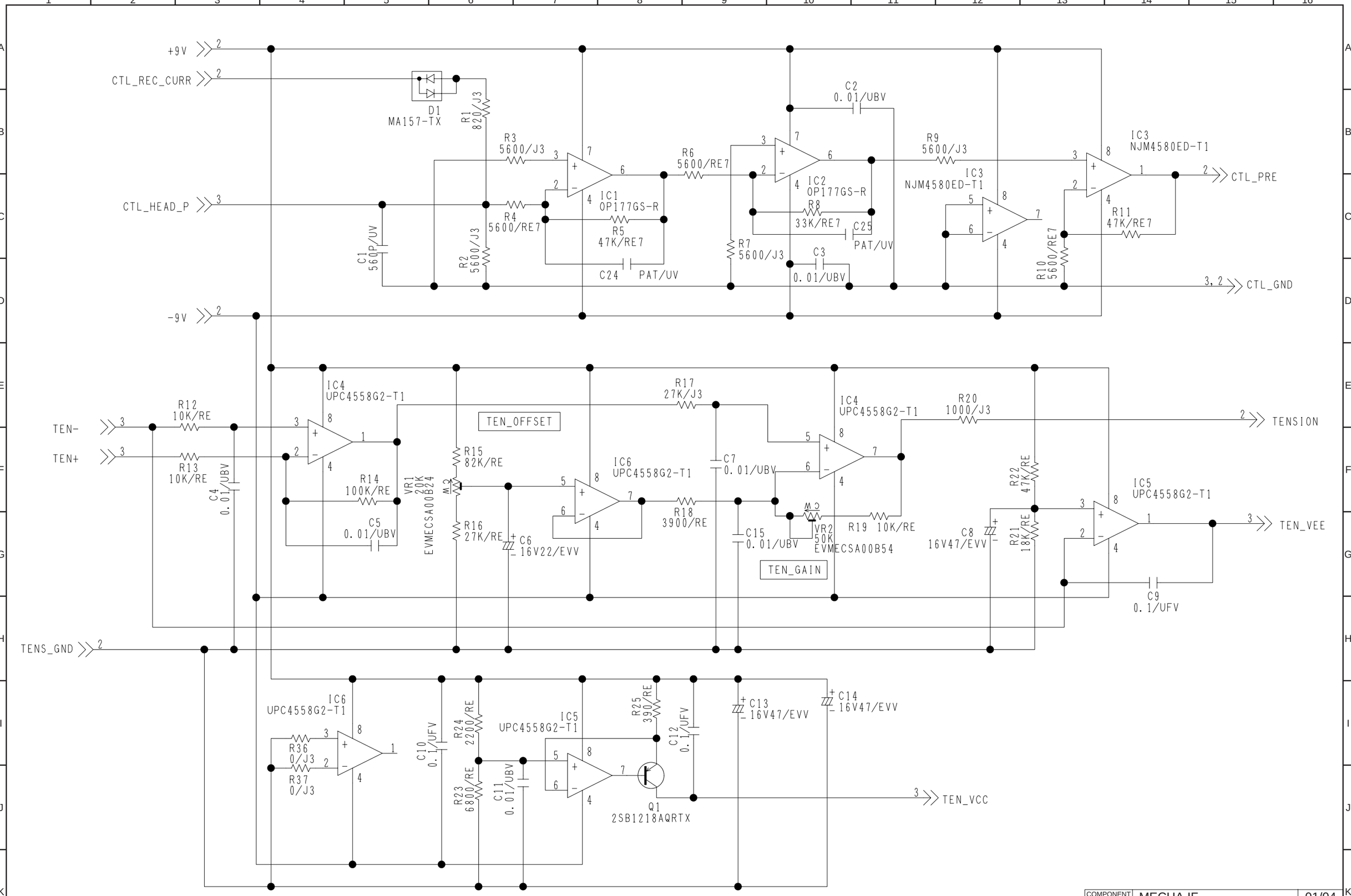

COMPONENT NAME	MECHA IF	01/04
CIRCUIT BOARD NO.		COMPONENT PATH
VEP82216B		
KR2C31(1/4)		SCM174

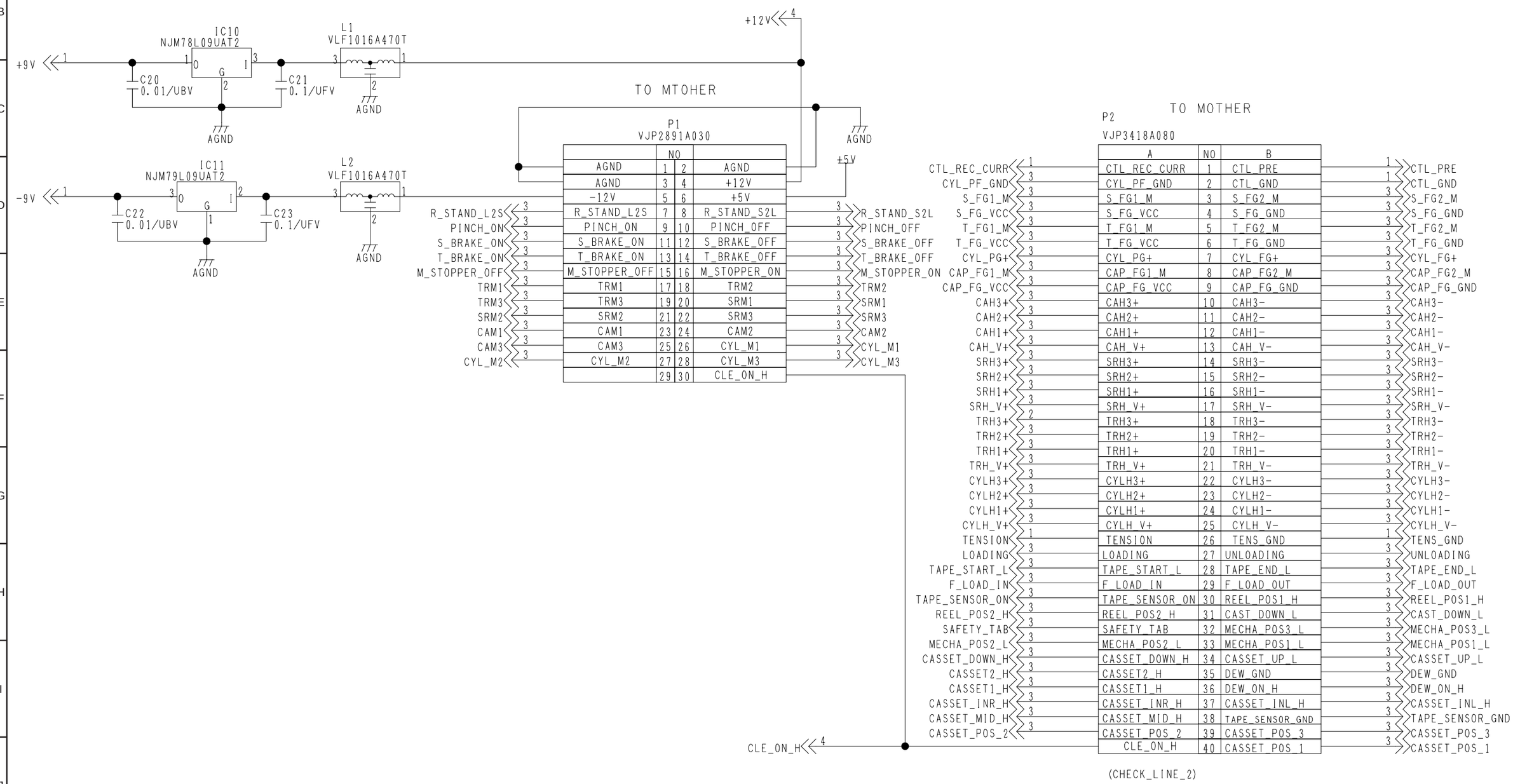

COMPONENT NAME	MECHA IF	02/04
CIRCUIT BOARD NO.	COMPONENT PATH	
VEP82216B		
KR2C31(2/4)		SCM175

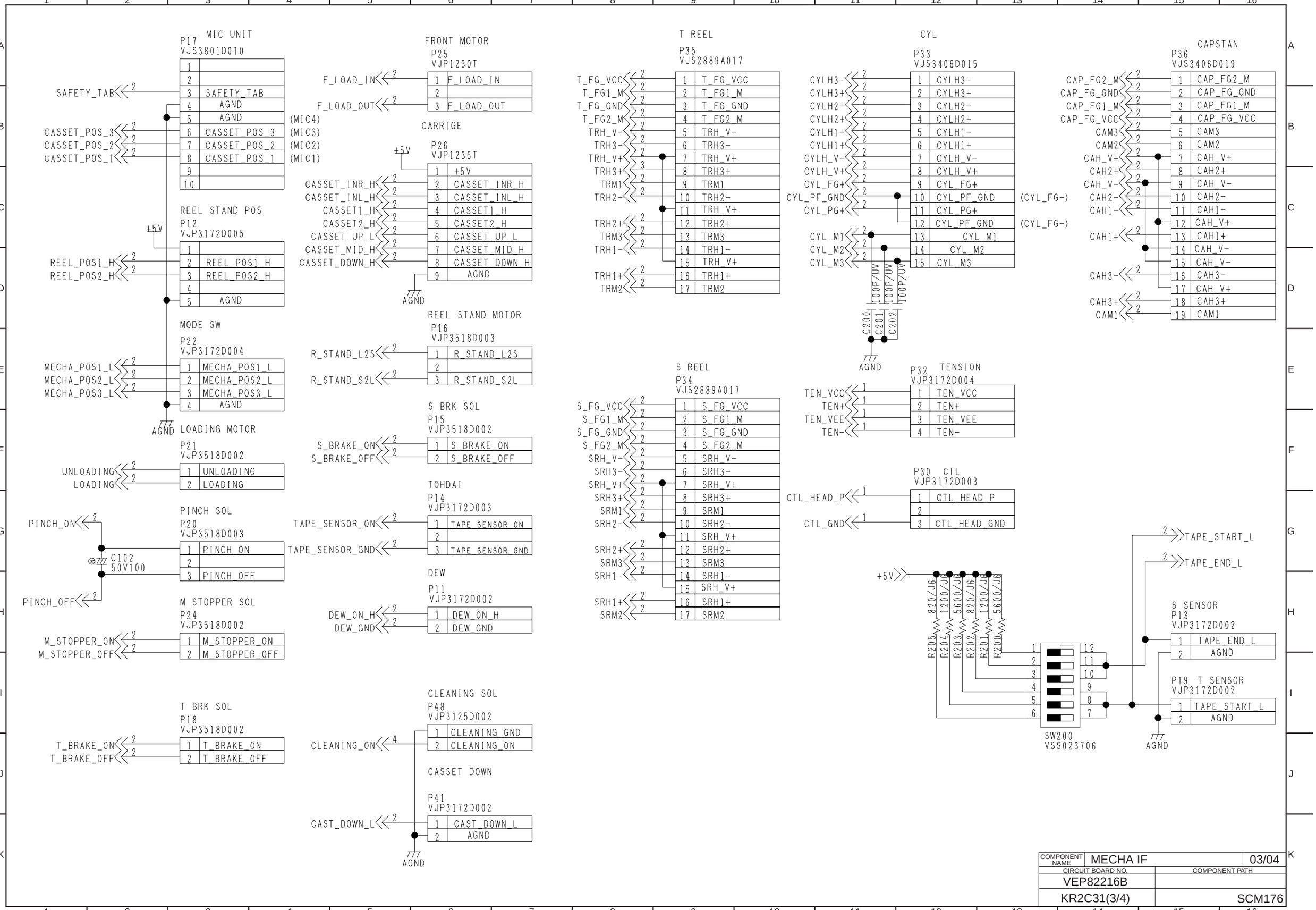

COMPONENT NAME	MECHA IF	03/04
CIRCUIT BOARD NO.	COMPONENT PATH	
VEP82216B		
KR2C31(3/4)		SCM176

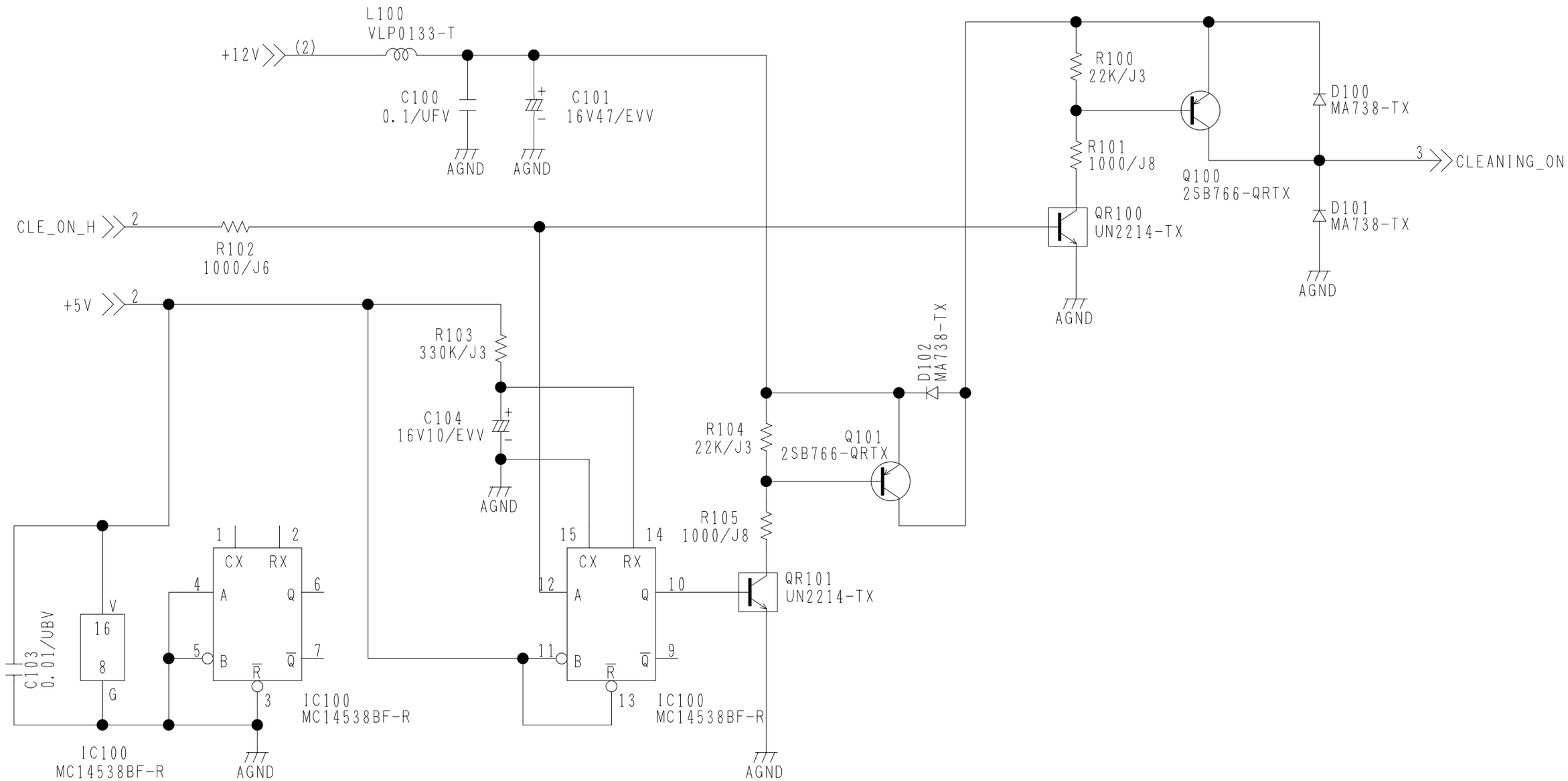

COMPONENT NAME	MECHA IF	04/04
CIRCUIT BOARD NO.		COMPONENT PATH
VEP82216B		
KR2C31(4/4)		SCM177